P/N 50879-14
MODEL 2500E

Balboa Instruments Incorporated
BALBOA INSTRUMENTS INC.
TUSTIN, CA.

LISTED 74254 US

Certified to comply with the limits for a class B computing device pursuant to subpart J of part 15 of the FCC rules

60 HZ

MODEL: DE-2500E-DCAJ

PAT. NO. 4618797

GRN	RED	BLK	WHT
Ground	Hot	Hot	Neutral
USE COPPER CONDUCTORS ONLY . 6 AWG			240V 40A 60Hz

Balboa Instruments Incorporated
09/25/02

2500E SYSTEM WIRING DIAGRAM

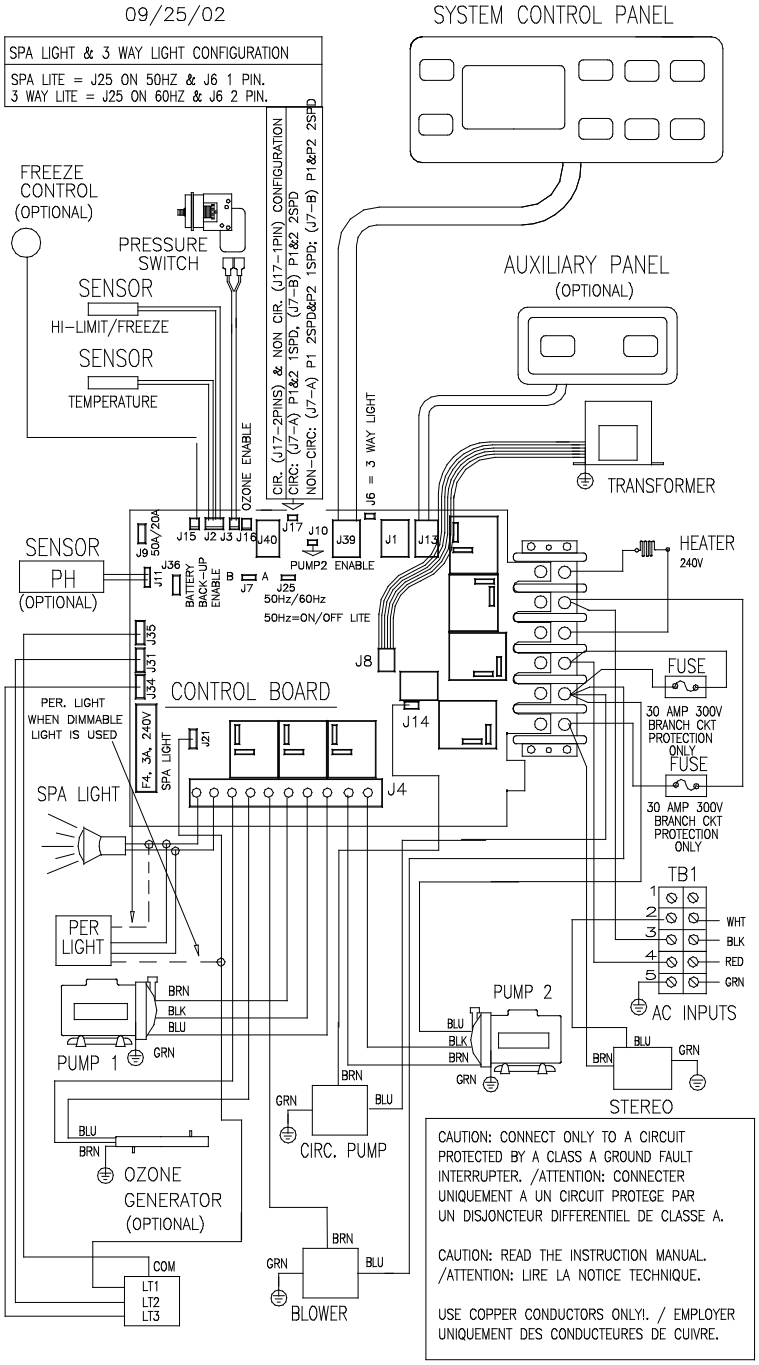

CAUTION: CONNECT ONLY TO A CIRCUIT PROTECTED BY A CLASS A GROUND FAULT INTERRUPTER. /ATTENTION: CONNECTER UNIQUEMENT A UN CIRCUIT PROTEGE PAR UN DISJONCTEUR DIFFERENTIEL DE CLASSE A.

CAUTION: READ THE INSTRUCTION MANUAL. /ATTENTION: LIRE LA NOTICE TECHNIQUE.

USE COPPER CONDUCTORS ONLY!. / EMPLOYER UNIQUEMENT DES CONDUCTEURES DE CUIVRE.

J & J PART#'S
PUMP-1 20256
PUMP-2 20262
OZONE 20680
SPA LIGHT 20255