USE COPPER WIRE
MIN 10 AWG
@ 105° C

P/N 53171HC1
MODEL M2

Balboa Instruments Incorporated
BALBOA INSTRUMENTS INC.
TUSTIN, CA.

LISTED 74254

Certified to comply with the limits for a class B computing device pursuant to subpart J of part 15 of the FCC rules

60 HZ

MODEL: DE-M2-CCA

PAT. NO. 4618797

USE COPPER CONDUCTOR ONLY #6 AWG MIN. WIRE= 60/75°C

EMPLOYER UNIQUEMENT DES CONDUCTEURS DE CUIVRE.

TORQUE RANGE FOR TB1: 16-18 IN. LBS

Balboa Instruments Incorporated

01/14/06

M2 SYSTEM WIRING DIAGRAM

P/N 53171HC1

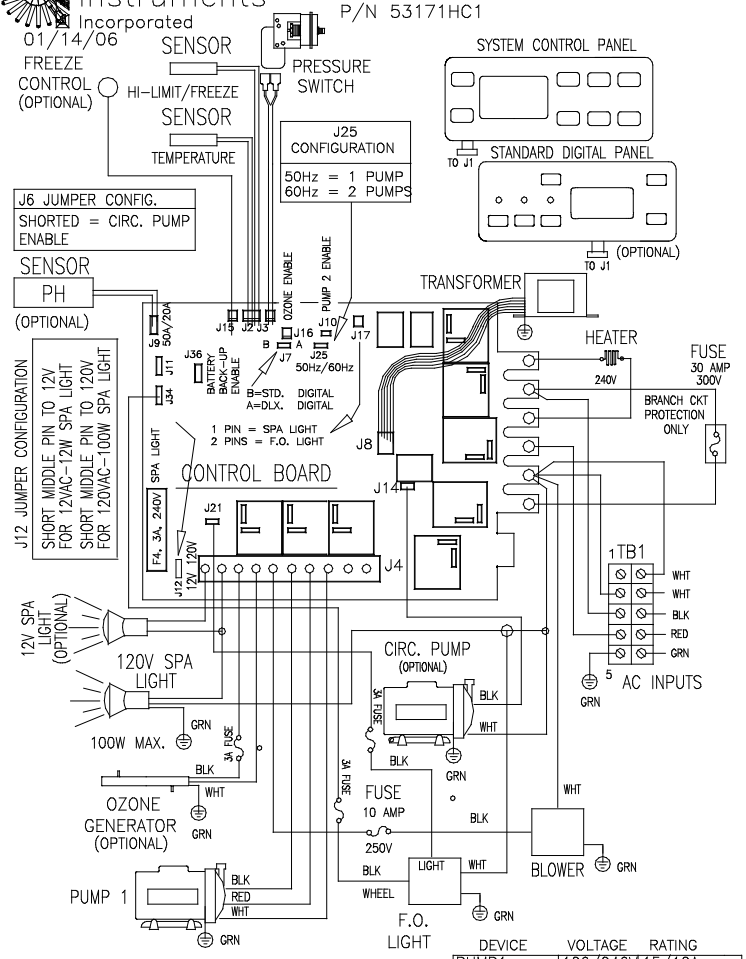

"A disconnecting means must be installed within sight from the equipment and at least 5 feet (1.52 m) from the inside walls of the pool, spa, or hot tub."

DEVICE	VOLTAGE	RATING
PUMP1	120/240V	15/12A
CIRC PUMP	120V	4A
OZONE	120/240V	1A
SPA LIGHT	12V	12W
FIBER OPTIC	120V	2A
BLOWER	120V	8A
SPA LIGHT2	120V	100W
HEATER	120/240V	1.4KW/5.5KW

TOTAL OUTPUT AMPERAGE DRAW NOT TO EXCEED MAX INPUT RATING OF SPA.

CONVERSION DIAGRAM 120V TO 240V

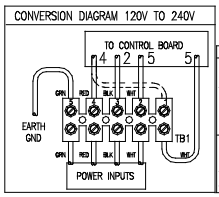

CONVERSION INSTRUCTIONS:

1. CONVERSION MUST BE PERFORMED BY A QUALIFIED, LICENSED ELECTRICIAN. HARDWIRE ONLY.
2. DISCONNECT FROM POWER AND REMOVE CORD.
3. MOVE RED WIRE (TB1-1) TO (TB1-4) AS INDICATED BY DASHED LINES.
4. MOVE THE HEATER MODE SELECTOR (J9) ON THE CONTROL BOARD FROM 20A TO 50A POSITION.

If this unit is to be permanently connected, connect only to a circuit that is protected by a Class A ground fault circuit interrupter (G.F.C.I.).